Bending Strength Comparison

A Simple Analysis of the Influence of Varying Flat Sheet Plate Thickness on Relative Bending Strength

Kevin Urquhart CEng MIMechE WhSch

06-Aug-17

Conducted on behalf of:

Metador, Britannia House,
John Boyle Road, Middlesbrough, TS6 6TY, UK

Contents

1 Summary

This report contains a basic engineering analysis conducted on behalf of Metador (henceforth referred to as the client) to confirm the general rule of thumb thought to relate the relative bending (or flexural) strength of a steel plate of given thickness to another steel plate of different thickness, otherwise under the influence of identical loading and boundary conditions.

The rule of thumb investigated is that the relative strength of two differing steel plates is related to the squares of the material thickness, as follows:

$$R = t_1^{\,2} / t_2^{\,2}$$

Where: t_1 is the thicker material
t_2 is the thinner material
R = Relative strength improvement between the two materials

This report aims to demonstrate the underlying established basic engineering theory behind this rule of thumb and confirm it is valid.

The report also provides empirical comparative data for 1.2mm, 1.5mm and 2.0mm plate thicknesses across a range of specified steel plate materials.

Note this report demonstrates a comparative study only for identical and largely arbitrary loading and boundary conditions, and does not provide a measure of absolute strength of any given product.

2 References

[1] IMechE Mechanical Engineer's Data Handbook (Carvill)

[2] Loaded Flat Plates (www.roymech.co.uk)

[3] Roark's Formulas for Stress and Strain, 7th Edition (Young and Budynas)

[4] Appendix 1 - Comparison of Bending Stresses and Deflections OPD 050817 – MathCAD

[5] Appendix 2 - Comparison of Bending Stresses and Deflections OPD 050817 - EXCEL

3 Analysis Overview

3.1 Boundary Conditions

The given boundary conditions set for the comparative analyses are a test load of 500N applied in the dead centre of a flat plate of dimensions 922mm wide by 2205mm long, which is assumed to be clamped around all edges.

These boundary conditions have been selected to simulate a test load being applied to the centre of the leaf of a steel security door of a given material and plate thickness, although it will be demonstrated that this is purely arbitrary in these simplified comparative analyses.

It is assumed in each case the material is homogenous and the plate thickness is constant.

3.2 Underlying Engineering Theory

Three sources commonly used by the author have been investigated to confirm and cross check the basic established underlying engineering theory for bending strength of flat plates, as given in the following sections.

3.2.1 IMechE Mechanical Engineer's Data Handbook (Carvill) (Ref [1])

Referring to **Ref [1] Chapter 1.10** for Loaded flat plates, the extracted formulae, related constant table and diagram for the bending stress and deflection of a rectangular plate with concentrated load at centre are given in Figure 1 below. Note the bending stress is for the centre of the long edge of the plate.

Rectangular plate, concentrated load at centre, clamped edges (empirical)

$\sigma_m = k_2 P/t^2$ (at middle of edge b)
$y_m = k_1 Pa^2/Et^3$ (at centre)

	b/a					
	1.0	1.2	1.4	1.6	1.8	2.0
k_1	0.061	0.071	0.076	0.078	0.079	0.079
k_2	0.754	0.894	0.962	0.991	1.000	1.004

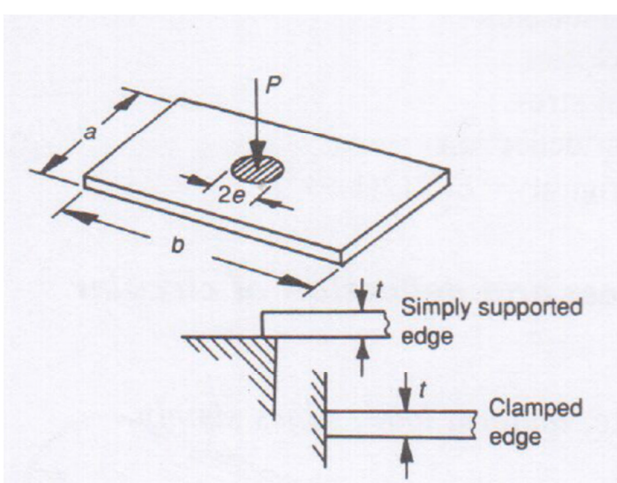

Figure 1 Extracts from IMechE Engineers Data Handbook for flat plates Chapter 1.10

3.2.2 Loaded Flat Plates (www.roymech.co.uk) (Ref[2])

http://www.roymech.co.uk/Useful_Tables/Mechanics/Plates.html

Referring to **Ref [2] Roymech tables for Loaded flat plates** the extracted formulae, constant tables and diagram are shown in Figure 2 below for a rectangular flat plate with a concentrated load applied at the centre, with clamped edges. These formulae correspond with those of section 3.2.1, as do the table entries. Note the addition of a formula for bending stress at the centre of the plate.

Rectangular Flat Plate , concentrated load at centre, edge clamped

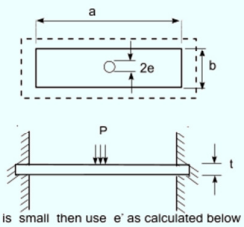

If e is small then use e' as calculated below

$$e' = \left(\sqrt{1{,}6e^2 + t^2}\right) - 0{,}675t \quad \text{if } e < 0{,}5t \text{ else use } e' = e$$

$$\sigma_{mc} = \frac{1{,}5P}{\pi t^2}\left((1+\nu)\ \ln\left(\frac{2b}{\pi e}\right) + k_3\right) \quad \text{At centre}$$

$$\sigma_m = k_2 \frac{P}{t^2} \quad \text{Middle of edge a}$$

$$y_m = k_1 \frac{Pb^2}{Et^3} \quad \text{At centre}$$

	a/b						
	1,0	1,2	1,4	1,6	1,8	2,0	3 ->
k_1	0,061	0,071	0,076	0,078	0,0786	0,0788	0,0791
k_2	0,754	0,894	0,962	0,991	1,000	1,004	1,008
k_3	-0,238	-0,0078	0,011	0,053	0,068	0,067	0,067

Figure 2 Extract from Roymech Formulas for loaded Flat Plates with concentrated load at centre, edge clamped

3.2.3 Roark's Formulas for Stress and Strain, 7th Edition (Young and Budynas)

Reviewing **Ref [3] Chapter 11, Table 11.4 Formulas for flat plates with straight boundaries and constant thickness** did not correspond to the exact boundary conditions desired in this report. However formulae in the extract given in Figure 3 indicate a same relationship to the square of the plate thickness in relation to bending stress is valid, independent of the slightly different formulae for the given boundary conditions.

TABLE 11.4 Formulas for flat plates with straight boundaries and constant thickness

NOTATION: The notation for Table 11.2 applies with the following modifications: a and b refer to plate dimensions, and when used as subscripts for stress, they refer to the stresses in directions parallel to the sides a and b, respectively. σ is a bending stress which is positive when tensile on the bottom and compressive on the top if loadings are considered vertically downward. R is the reaction force per unit length normal to the plate surface exerted by the boundary support on the edge of the plate. r'_o is the equivalent radius of contact for a load concentrated on a very small area and is given by $r'_o = \sqrt{1.6r_o^2 + t^2} - 0.675t$ if $r_o < 0.5t$ and $r'_o = r_o$ if $r_o \geq 0.5t$

Case no., shape, and supports	Case no., loading	Formulas and tabulated specific values
1. Rectangular plate; all edges simply supported	1a. Uniform over entire plate	(At center) $\sigma_{max} = \sigma_b = \frac{\beta q b^2}{t^2}$ and $y_{max} = \frac{-\alpha q b^4}{Et^3}$ (At center of long sides) $R_{max} = \gamma q b$

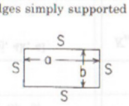

a/b	1.0	1.2	1.4	1.6	1.8	2.0	3.0	4.0	5.0	∞
β	0.2874	0.3762	0.4530	0.5172	0.5688	0.6102	0.7134	0.7410	0.7476	0.7500
α	0.0444	0.0616	0.0770	0.0906	0.1017	0.1110	0.1335	0.1400	0.1417	0.1421
γ	0.420	0.455	0.478	0.491	0.499	0.503	0.505	0.502	0.501	0.500

(Ref. 21 for $\nu = 0.3$)

Figure 3 Extract from Formulas for flat plates with straight boundaries and constant thickness in Chapter 11

3.2.4 Summary of Engineering Theory

The formulae for bending stress and deflection of a flat plate, clamped on all edges with a concentred load applied in the centre correlate between 3.2.1 and 3.2.2, so these have been employed for this report.

3.3 Material Comparisons

As requested by the client, the following materials were considered:

1. 1.2mm Galvanised sheet steel
2. 1.2mm "Zintec" sheet steel
3. 1.2mm "Magnelis" sheet steel
4. 1.2mm High Tensile Sheet steel

Analysing the data sheets provided by the client for the above materials confirmed that they are all carbon steel substrate with varying degrees of corrosion protection added as a coating.

2 main grades steel have been identified from these data sheets, namely:

Galvanealed "High Tensile" Sheet Steel	UTS 25-55 KSI, or 172.4-379.2 MPa
DX51D+Z	UTS 270-500 MPa

where UTS = Ultimate Tensile Strength

It should be noted the "high tensile" galvanealed material actually has a much lower UTS than the DX51D material.

Since carbon steel materials all generally have identical Young's Modulus and Poison's Ratio for the purpose of calculation, the below constants related to steel material have been assumed to be consistent for all of the above materials.

Young's Modulus for steel	210 GPa
Poisson's ratio for steel	0.3

Furthermore, since these two constants are the only material specific data used directly it can be assumed that all of the above materials are equal for the purposes of this simplified comparison report and therefore only one data set has been entered. Should a more detailed absolute stress analysis be required at a later date using the correct part geometry, then the relative strengths of these materials would be considered at that point.

The specific values for differing materials may also be entered into the calculations to compare alternative solutions at a later date if required.

4 Results

In section 3 the formulae and tables from Roymech and IMechE were shown to correlate and have therefore been applied in the analyses conducted in Ref [4] and Ref [5]. The former is a more graphical illustration of the formulae at work using an engineering tool, and the latter is a cross check provided to allow the client to conduct their own analyses by varying the inputs highlighted in yellow.

The results between Ref [4] and Ref [5] are shown to correlate, with each identifying the relative bending stresses and deflections for 1.2mm, 1.5mm, 2.0mm thickness plate steel under the same loading and boundary conditions, i.e. all other parameters are identical, and their relative differences in comparison to the rule of thumb being applied.

It can be further demonstrated that varying the fixed parameters for the given boundary conditions do not have any effect on the final result and are therefore arbitrary when only the plate thickness is changed between each set of calculations and all other parameters are equal across the comparison data.

The results show:

1. Dividing the square of the thicknesses of two plate steel materials under identical loading and boundary conditions gives a measure of their relative **strength** in terms of bending stress.
2. Dividing the cube of the thicknesses of two plate steel materials under identical loading and boundary conditions gives a measure of their relative **stiffness** in terms of resistance to bending.
3. 1.5mm plate steel exhibits **56.3%** less bending stress than 1.2mm steel under the identical loading and boundary conditions applied.
4. 2.0mm Plate steel exhibits **77.8%** less bending stress than 1.5mm steel under the identical loading and boundary conditions applied.
5. 1.5mm Plate steel exhibits **95.3%** less deflection than 1.2mm steel under the identical loading and boundary conditions applied.
6. 2.0mm plate steel exhibits **137%** less deflection than 1.5mm plate steel under the identical loading and boundary conditions applied.

5 Conclusions & Recommendations

Formulae have been identified from established basic engineering theory and have been used to calculate bending stress and deflection for three thicknesses of flat plates under a concentrated load applied at the centre, with all edges clamped.

The calculations shown in Refs [4] and [5] use this theory to demonstrate that the relative strength in terms of bending stress is directly related to the squares of their varying material thicknesses for otherwise identical loading and boundary conditions, thereby proving the following rule of thumb successfully:

$$R = t_1^{\,2} / t_2^{\,2}$$

Where: t_1 is the thicker material
t_2 is the thinner material
R = Relative strength improvement between the two materials

This means that a 1.5mm flat steel plate has been demonstrated to be generally 56% stronger under bending than a 1.2mm plate under otherwise identical loading and conditions.

The calculations further demonstrate that the relative stiffness of different plate materials is related to the cubes of their differing thickness for otherwise identical loading and boundary conditions.

It should be noted the calculations herein are highly simplified and are only valid when comparing the **relative** bending strength and stiffness of flat plates of varying thickness. The boundary conditions and loading are therefore arbitrary and any values should not be taken as absolute.

Any relationship to the actual strength and stiffness of these materials would be purely coincidental since the actual form, fit and function of any particular product has not been considered.

It should be further noted that the materials investigated in Section 3.3 are similar carbon steel substrate materials with varying degrees of corrosion protection. Although 2 steel grades are noted with differing ultimate tensile strengths, these parameters did not influence the results of the simplified comparative analyses herein, and would only be considered in a more detailed absolute stress analysis exercise.

Furthermore in these simplified analyses both sets of materials would have been shown to have been loaded beyond their tensile limits. A more detailed investigation would be necessary to establish the absolute performance of the specific product design using a realistic load case should this be deemed to be critical.

Finally, physical testing of actual products in a controlled environment is highly recommended to reliably conduct any comparative analysis of relative strengths, since calculations and simulation assume nominal dimensions and do not account for the influence of material, manufacturing, fabrication and form variations which may have an effect on the performance of a given product.

Kevin Urquhart CEng MIMechE WhSch
Orion Product Development Ltd.
6th August 2017

Appendix 1 - Comparison of Flat Plate Bending Stresses and Deflections

References

[1] IMechE Data handbook Chapter 1.10
[2] Roymech Rectangular Flat Plate theorem

Concentrated load at centre, clamped edges

Variables

Plate Length	$a := 2200\ mm$
Plate Width	$b := 922\ mm$
Test Load	$F := 500\ N$
Test Load Application Radius	$e := 50\ mm$
Table Constants	$k_1 := 0.0788$
" "	$k_2 := 1.004$
" "	$k_3 := 0.067$

Young's Modulus for Steel	$E := 210\ GPa$
Poisson Ratio for Steel	$\nu := 0.3$

Plate Thicknesses

$t_1 := 1.2\ mm$ $\quad t_2 := 1.5\ mm$ $\quad t_3 := 2.0\ mm$

Stress and Deflections

Max. Bending Stress at Centre

$$\sigma_{mc1} := \frac{1.5 \cdot F}{\pi \cdot t_1^{\ 2}} \cdot \left(\left((1+\nu) \cdot \ln\left(\frac{2 \cdot b}{\pi \cdot e} \right) \right) + k_3 \right)$$

$$\sigma_{mc2} := \frac{1.5 \cdot F}{\pi \cdot t_2^{\ 2}} \cdot \left(\left((1+\nu) \cdot \ln\left(\frac{2 \cdot b}{\pi \cdot e} \right) \right) + k_3 \right)$$

$$\sigma_{mc3} := \frac{1.5 \cdot F}{\pi \cdot t_3^{\ 2}} \cdot \left(\left((1+\nu) \cdot \ln\left(\frac{2 \cdot b}{\pi \cdot e} \right) \right) + k_3 \right)$$

$\sigma_{mc1} = 541.926\ MPa$ $\quad \sigma_{mc2} = 346.833\ MPa$ $\quad \sigma_{mc3} = 195.093\ MPa$

Max. Deflection at Centre

$$y_{m1} := \frac{k_1 \cdot F \cdot b^2}{E \cdot t_1^{\ 3}} \qquad y_{m2} := \frac{k_1 \cdot F \cdot b^2}{E \cdot t_2^{\ 3}} \qquad y_{m3} := \frac{k_1 \cdot F \cdot b^2}{E \cdot t_3^{\ 3}}$$

$y_{m1} = 92.299\ mm$ $\quad y_{m2} = 47.257\ mm$ $\quad y_{m3} = 19.936\ mm$

Flexural Rigidity (i.e, Bending Stiffness)

$$D_1 := \frac{E \cdot t_1^{\,3}}{12\left(1-\nu^2\right)} \qquad D_2 := \frac{E \cdot t_2^{\,3}}{12\left(1-\nu^2\right)} \qquad D_3 := \frac{E \cdot t_3^{\,3}}{12\left(1-\nu^2\right)}$$

$$D_1 = 33.231\ N \cdot m \qquad D_2 = 64.904\ N \cdot m \qquad D_3 = 153.846\ N \cdot m$$

Comparison of Results

		Which Directly Correlates to:
Bending Stress of 1 and 2	$\frac{\sigma_{mc1}}{\sigma_{mc2}} = 1.563$	$\frac{t_2^{\,2}}{t_1^{\,2}} = 1.563$
Bending Stress of 2 and 3	$\frac{\sigma_{mc2}}{\sigma_{mc3}} = 1.778$	$\frac{t_3^{\,2}}{t_2^{\,2}} = 1.778$
Deflection of 1 and 2	$\frac{y_{m1}}{y_{m2}} = 1.953$	$\frac{t_2^{\,3}}{t_1^{\,3}} = 1.953$
Deflection of 2 and 3	$\frac{y_{m2}}{y_{m3}} = 2.37$	$\frac{t_3^{\,3}}{t_2^{\,3}} = 2.37$
Flexural Rigidity of 1 and 2	$\frac{D_2}{D_1} = 1.953$	$\frac{t_2^{\,3}}{t_1^{\,3}} = 1.953$
Flexural Rigidity of 2 and 3	$\frac{D_3}{D_2} = 2.37$	$\frac{t_3^{\,3}}{t_2^{\,3}} = 2.37$

Conclusions

Dividing the square of the thicknesses of two plate steel materials under identical loading and boundary conditions gives a measure of their relative **strength** in terms of bending stress.

1. Dividing the cube of the thicknesses of two plate steel materials under identical loading and boundary conditions gives a measure of their relative **stiffness** in terms of resistance to bending.
2. 1.5mm plate steel exhibits **56.3%** less bending stress than 1.2mm steel under the identical loading and boundary conditions applied.
3. 2.0mm Plate steel exhibits **77.8%** less bending stress than 1.5mm steel under the identical loading and boundary conditions applied.
4. 1.5mm Plate steel exhibits **95.3%** less deflection than 1.2mm steel under the identical loading and boundary conditions applied.
5. 2.0mm plate steel exhibits **137%** less deflection than 1.5mm plate steel under the identical loading and boundary conditions applied.

Appendix 2 - Comparison of Flat Plate Steel Bending Stresses and Deflection

Assumptions

1. Material is homogenous
2. Plate thickness is constant
3. Plate is clamped on all sides
4. The test pressure application radius greater than half of the plate thickness

References

1. IMechE Mechanical Engineer's Data Handbook chapter 1.10
2. http://www.roymech.co.uk/Useful_Tables/Mechanics/Plates.html

Rectangular Flat Plate , concentrated load at centre, edge clamped

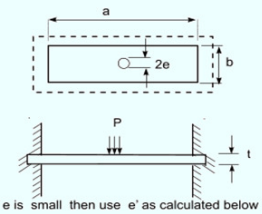

If e is small then use e' as calculated below

$$e' = \left(\sqrt{1{,}6e^2 + t^2}\right) - 0{,}675t \quad \text{if } e < 0{,}5t \text{ else use } e' = e$$

$$\sigma_{mc} = \frac{1{,}5P}{\pi t^2}\left((1+\nu)\ \ln\left(\frac{2b}{\pi e}\right) + k_3\right) \quad \text{At centre}$$

$$\sigma_m = k_2 \frac{P}{t^2} \quad \text{Middle of edge a}$$

$$y_m = k_1 \frac{Pb^2}{Et^3} \quad \text{At centre}$$

	a/b						
	1,0	1,2	1,4	1,6	1,8	2,0	3 ->
k_1	0,061	0,071	0,076	0,078	0,0786	0,0788	0,0791
k_2	0,754	0,894	0,962	0,991	1,000	1,004	1,008
k_3	-0,238	-0,0078	0,011	0,053	0,068	0,067	0,067

Notes:

1. The plate thicknesses highlighted in yellow can be varied to compare the relative strength and stiffness of three progressively thicker plates.
2. The boundary shown in orange can also be varied but must be identical across all three data sets

		1	2	3
Material Properties	**Material**	**Steel**	**Steel**	**Steel**
	Grade	**DX51D-Z**	**DX51D-Z**	**DX51D-Z**
	Young Modulus, E (GPa)	210	210	210
	Poisson's ratio,	0.3	0.3	0.3
Geometry	**Thickness, t (mm)**	1.2	1.5	2.0
	Thickness, t (m)	0.0012	0.0015	0.0020
	Length, a (m)	2.2	2.2	2.2
	width, b (m)	0.922	0.922	0.922
Test Parameters	**Test force, P (N)**	500	500	500
	Test radius, e (m)	0.05	0.05	0.05
Table Constants	**a/b**	2.39	2.39	2.39
	k1 (from table above)	0.0788	0.0788	0.0788
	k2 (from table above)	1.004	1.004	1.004
	k3 (from table above)	0.067	0.067	0.067
Bending Stress	**Stress at centre of long edge, σm (N/m^2)**	348611111.11	223111111.11	125500000.00
	Stress at centre of long edge, σm (MPa)	348.61	223.11	125.50
	Stress at centre, σmc (M/m^2)	541926123.5	346832719.1	195093404.5
	Stress at centre, σmc (MPa)	541.93	346.83	195.09
Deflection	**Deflection at centre, ym (mm)**	92.30	47.26	19.94

Summary		**Cross check from Rule of Thumb**	
Bending Stresses σmc1 divided by σmc2	1.56	t2^2/t1^2	1.56
Bending Stresses σmc2 divided by σmc3	1.78	t3^2/t2^2	1.78
Deflections ym1 divided by ym2	1.95	t2^3/t1^3	1.95
Deflections ym1 divided by ym2	2.37	t3^3/t2^3	2.37